Instruções de montagem
3D File
Dados fotométricos
Revit

Samper

PX-0353-NEG

Aplique IP65 Samper LED 10.5W 3000K Preto 615lm

CARACTERÍSTICAS TÉCNICAS

IP65 IK08 BREEAM

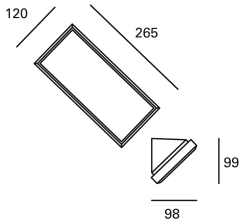

Potência (W) : 10.5W

Consumo total da luminária (W) : 12W

Lúmenes reais : 615

Lm/W reais : 51

Temperatura da cor : Branco quente - 3000K

Material da estrutura : Policarbonato + ABS

Acabamento estrutura : Preto

Material do difusor : Policarbonato

Acabamento difusor : Opala

Vida útil : 36.000h L70B30

Equipamento incluído : Sim, eletrónico

Tensão / Frequência : 100-240V/50-60Hz

Garantia : 5 Anos

Temperatura máx. : 25ºC

orla marítima : Sim

Eficiência energética : LED A++

CARACTERÍSTICAS LUMINOTÉCNICAS

Fonte de luz: LED

CRI: 80

MacAdam steps: 3

Risco fotobiológico: RG0

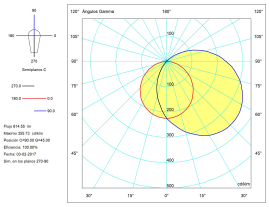

LOGÍSTICA

Peso líquido (kg): 0.42

Peso embalado (kg): 0.56

Embalagem: 110mm x 110mm x 275mm

16 Un

APLICAÇÃO DA LUMINÁRIA

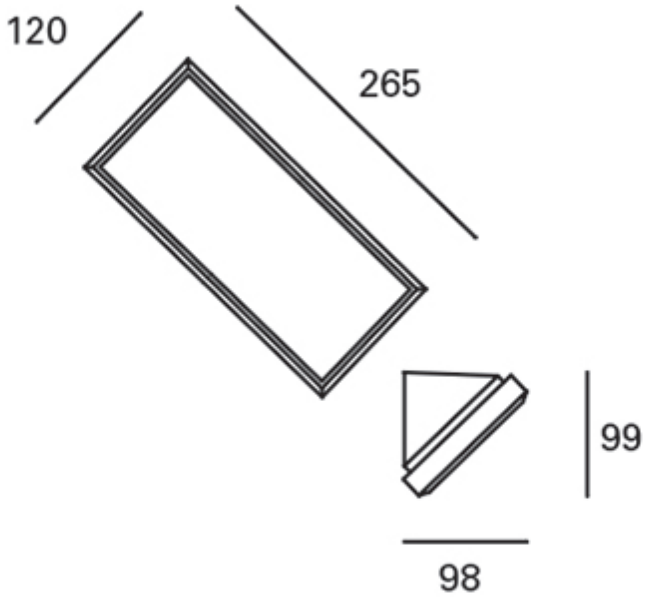

Luminaire
Code PX-0353-NEG
Name Aplique SAMPER led 12W 3000K
Measurem.
Code CL116A17F031G
Name Aplique SAMPER led 12W 3000K

Luminaire Flux	614.55 lm	Luminaire Power	11.82 W	Efficacy	51.99 lm/W	Efficiency	100.00%
Lamps Flux	614.55 lm	Maximum value	355.73 cd/klm	Position	C=90.00 G=45.00	CG	Sym. on planes 270-90

Rectangular Luminaire		Length	120 mm	Width	265 mm	Height	99 mm
Rectangular Luminous Area		Length	95 mm	Width	240 mm	Height	1 mm
Horizontal Luminous Area		0.022800 m2		Emitting area on Plane 180°		0.000095 m2	
Emitting area on Plane 0°		0.000095 m2		Emitting area on Plane 270°		0.000240 m2	
Emitting area on Plane 90°		0.000240 m2		Glare area at 76°		0.005608 m2	
Coordinate system		CG Roads		Symmetry Type		Sym. on planes 270-90	
Date		03-02-2017		Maximum Gamma Angle		180	
Measurement Distance		0.00		Measurement Flux		614.55 lm	
Operator		Asselum T2		Source Voltage [V]			
Temperature		25.00 °C		Source current [A]			
Humidity		60.00 %		Photocell			
Notes							

Luminaire Lamps

Line	Code	Name	Flux [lm]	Pow. [W]	Q.ty
	PX-0353-NEG	PX-0353-NEG	614.55	11.82	1

C.I.E.	36 63 85 86 100	D DIN 5040	B21	

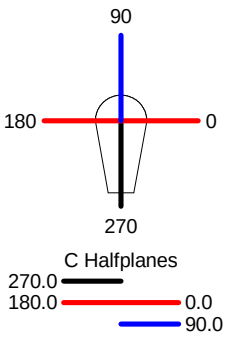

ULOR 13.98 %
DLOR 86.02 %
RN 13.98 %

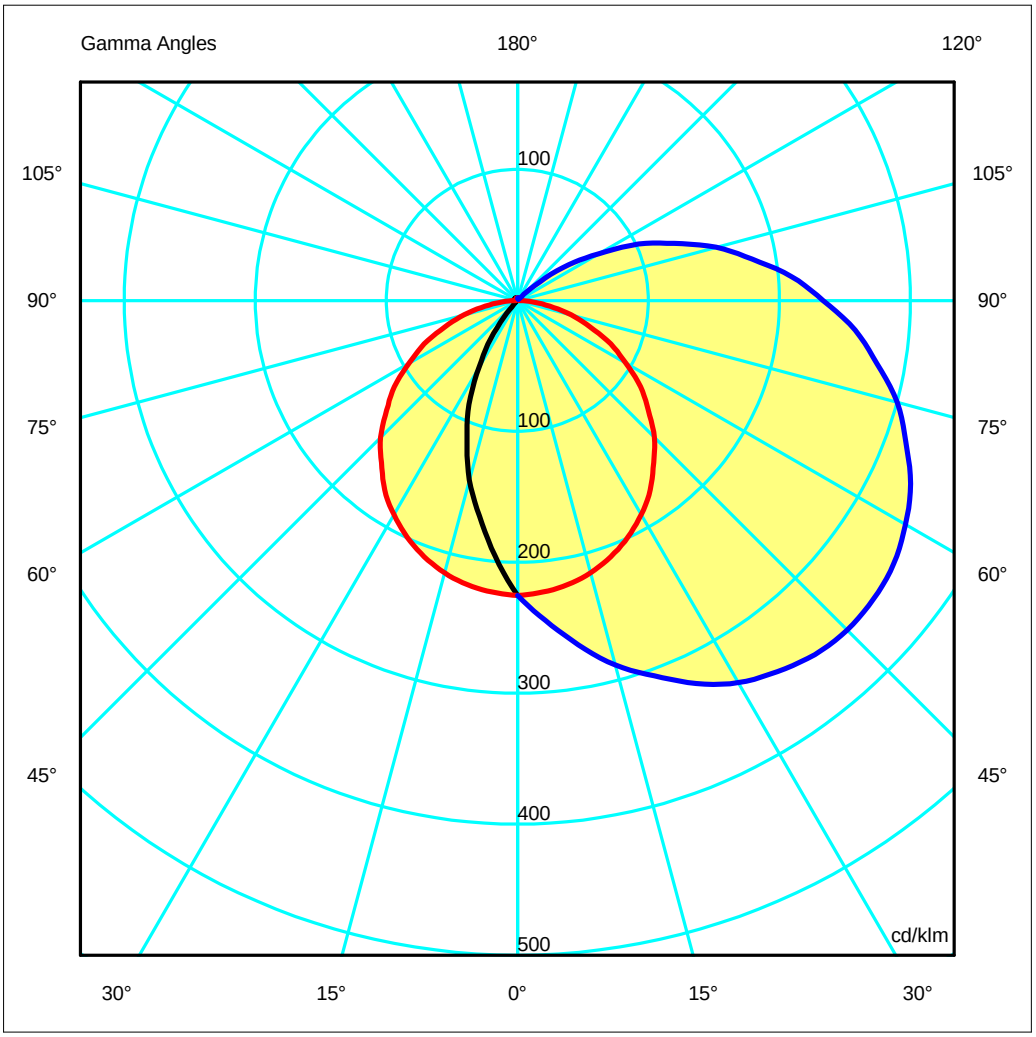

Luminaire
Code PX-0353-NEG
Name Aplique SAMPER led 12W 3000K
Measurem.
Code CL116A17F031G
Name Aplique SAMPER led 12W 3000K

Luminaire Flux	614.55 lm	Luminaire Power	11.82 W	Efficacy	51.99 lm/W	Efficiency	100.00%
Lamps Flux	614.55 lm	Maximum value	355.73 cd/klm	Position	C=90.00 G=45.00	CG	Sym. on planes 270-90

Luminous Intensity Table cd/klm **Table 1/1**

	C 270.00	C 285.00	C 300.00	C 315.00	C 330.00	C 345.00	C 0.00	C 15.00	C 30.00	C 45.00	C 60.00	C 75.00	C 90.00
G 0.0	225.25	225.25	225.25	225.25	225.25	225.25	225.25	225.25	225.25	225.25	225.25	225.25	225.25
G 5.0	196.00	205.74	200.78	211.00	209.58	219.62	223.48	231.62	234.83	245.00	243.80	252.41	245.35
G 10.0	167.25	178.50	175.72	190.26	194.55	211.61	220.39	234.56	244.36	258.91	260.94	273.58	266.82
G 15.0	141.92	154.58	149.07	171.32	177.80	200.24	215.28	235.23	252.24	270.95	279.01	292.40	288.18
G 20.0	112.95	125.90	126.12	147.68	159.86	188.22	208.14	233.52	256.95	280.46	292.67	309.07	305.08
G 25.0	87.49	100.71	98.60	127.00	141.02	173.84	199.39	230.05	259.93	287.43	305.81	322.78	322.65
G 30.0	58.66	71.97	75.38	102.35	121.10	159.11	188.73	223.81	260.18	291.73	314.40	334.11	336.95
G 35.0	35.77	47.93	49.01	80.99	100.15	142.10	176.60	216.55	257.68	293.15	321.42	341.94	345.92
G 40.0	12.63	23.56	28.82	56.53	79.71	125.48	161.60	205.99	253.21	291.77	324.42	346.61	352.94
G 45.0	1.99	6.45	8.63	36.81	58.99	106.40	147.76	195.49	246.02	287.71	324.53	347.53	355.73
G 50.0	1.21	1.62	1.88	16.34	39.36	87.58	130.25	180.97	236.97	280.66	321.60	344.46	354.66
G 55.0	1.22	1.14	1.22	2.95	21.71	68.46	114.75	167.46	225.42	271.15	314.64	338.57	350.55
G 60.0	1.29	1.22	1.29	1.52	6.60	48.63	95.32	149.96	212.21	257.78	305.55	328.06	341.92
G 65.0	1.43	1.36	1.36	1.34	1.76	32.52	78.55	133.01	197.10	244.66	292.40	316.30	330.99
G 70.0	1.57	1.43	1.48	1.40	1.42	15.83	58.94	114.72	180.24	226.84	278.51	299.61	315.40
G 75.0	1.65	1.55	1.58	1.51	1.47	3.92	42.26	95.90	161.88	210.25	260.16	282.47	299.99
G 80.0	1.73	1.68	1.68	1.61	1.56	1.58	24.94	76.77	142.88	189.04	242.53	260.88	278.67
G 85.0	1.86	1.78	1.79	1.70	1.61	1.50	11.56	58.11	122.56	169.62	219.75	240.60	258.59
G 90.0	2.00	1.90	1.90	1.79	1.68	1.50	1.59	39.72	101.85	145.62	199.09	215.08	233.33
G 95.0	2.09	2.02	2.00	1.90	1.82	1.57	1.31	21.82	80.66	124.27	173.00	192.08	209.89
G100.0	2.22	2.11	2.08	1.97	1.86	1.74	1.25	8.54	60.08	99.10	149.02	163.57	181.85
G105.0	2.29	2.20	2.18	2.04	1.97	1.82	1.29	1.61	40.19	77.38	122.71	137.29	156.97
G110.0	2.36	2.29	2.25	2.11	2.07	1.86	1.33	1.54	22.10	52.53	95.07	109.02	127.29
G115.0	2.39	2.34	2.29	2.18	2.12	1.86	1.36	1.54	6.72	32.49	70.97	82.22	101.81
G120.0	2.43	2.36	2.34	2.25	2.15	1.93	1.43	1.57	1.59	12.98	44.76	55.33	71.18
G125.0	2.43	2.40	2.37	2.29	2.18	1.93	1.50	1.58	1.43	1.73	24.51	31.66	47.66
G130.0	2.43	2.43	2.38	2.32	2.18	2.00	1.56	1.68	1.47	1.34	4.72	10.48	21.98
G135.0	2.50	2.43	2.39	2.29	2.22	2.07	1.60	1.75	1.50	1.42	1.36	1.45	4.46
G140.0	2.43	2.41	2.40	2.32	2.22	2.07	1.65	1.79	1.61	1.46	1.25	1.18	1.15
G145.0	2.50	2.42	2.34	2.30	2.25	2.10	1.71	1.87	1.68	1.54	1.32	1.28	1.14
G150.0	2.36	2.36	2.31	2.29	2.22	2.18	1.74	1.91	1.72	1.59	1.39	1.35	1.28
G155.0	2.29	2.29	2.25	2.25	2.22	2.18	1.79	1.97	1.79	1.67	1.47	1.46	1.36
G160.0	2.22	2.22	2.18	2.22	2.18	2.18	1.79	2.00	1.86	1.75	1.57	1.53	1.50
G165.0	2.15	2.15	2.15	2.18	2.18	2.18	1.82	2.04	1.93	1.82	1.68	1.64	1.57
G170.0	2.07	2.07	2.07	2.15	2.18	2.21	1.86	2.07	1.97	1.92	1.79	1.72	1.65
G175.0	1.96	2.00	2.00	2.08	2.15	2.19	1.90	2.15	2.04	1.97	1.89	1.79	1.79
G180.0	2.03	2.03	2.03	2.03	2.03	2.03	2.03	2.03	2.03	2.03	2.03	2.03	2.03

Luminaire
Code PX-0353-NEG
Name Aplique SAMPER led 12W 3000K
Measurem.
Code CL116A17F031G
Name Aplique SAMPER led 12W 3000K

Luminaire Flux	614.55 lm	Luminaire Power	11.82 W	Efficacy	51.99 lm/W	Efficiency	100.00%
Lamps Flux	614.55 lm	Maximum value	355.73 cd/klm	Position	C=90.00 G=45.00	CG	Sym. on planes 270-90

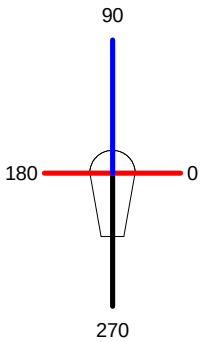

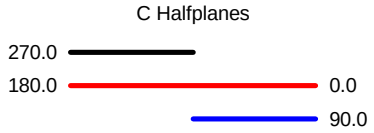

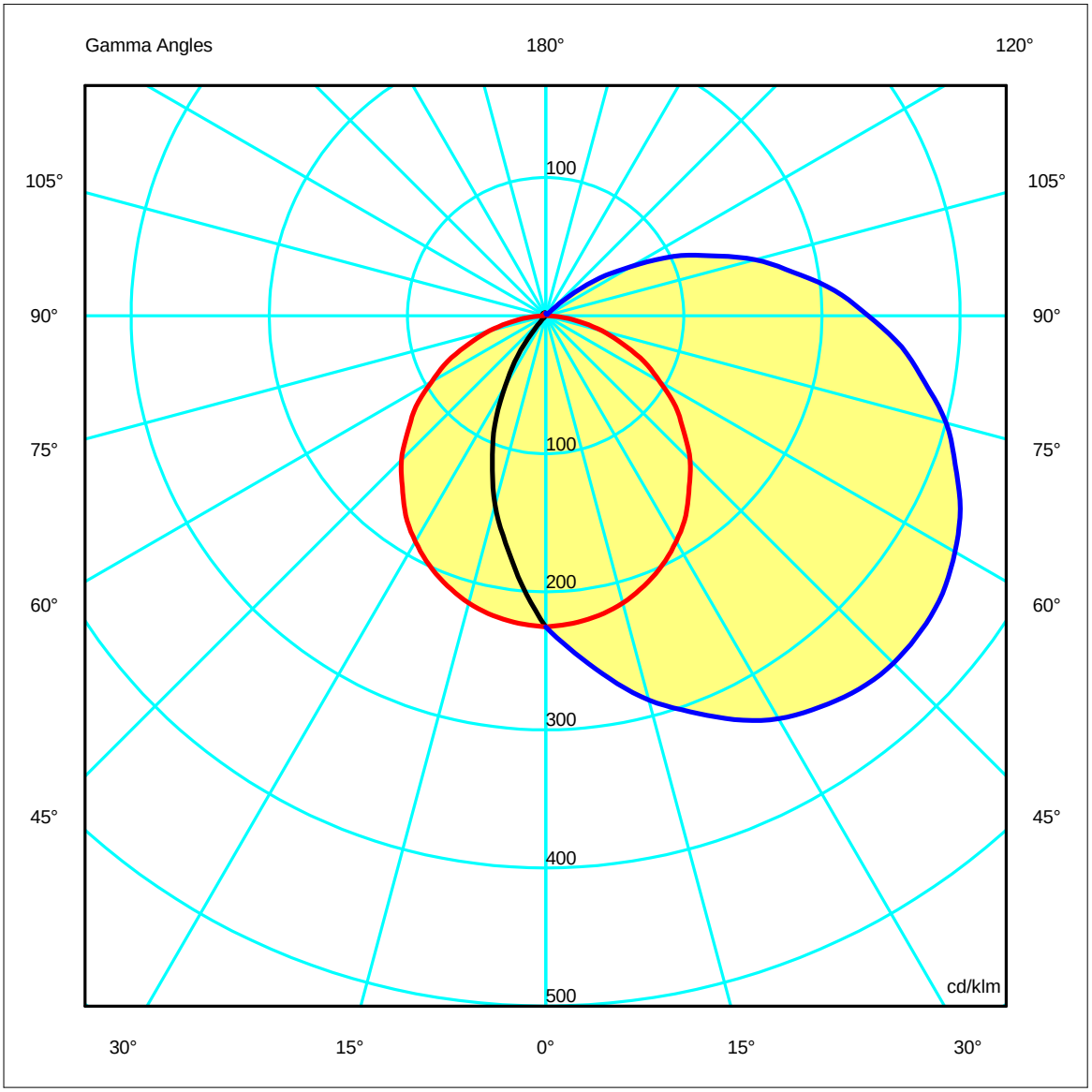

Luminaire
Code PX-0353-NEG
Name Aplique SAMPER led 12W 3000K
Measurem.
Code CL116A17F031G
Name Aplique SAMPER led 12W 3000K

Luminaire Flux	614.55 lm	Luminaire Power	11.82 W	Efficacy	51.99 lm/W	Efficiency	100.00%
Lamps Flux	614.55 lm	Maximum value	355.73 cd/klm	Position	C=90.00 G=45.00	CG	Sym. on planes 270-90

Could not find 90270 right beam angle•gamma0180=0

Could not find 90270 right beam angle•gamma0180=0

Could not find 90270 right beam angle•gamma0180=0

Luminaire
Code PX-0353-NEG
Name Aplique SAMPER led 12W 3000K
Measurem.
Code CL116A17F031G
Name Aplique SAMPER led 12W 3000K

Luminaire Flux	614.55 lm	Luminaire Power	11.82 W	Efficacy	51.99 lm/W	Efficiency	100.00%
Lamps Flux	614.55 lm	Maximum value	355.73 cd/klm	Position	C=90.00 G=45.00	CG	Sym. on planes 270-90

UGR
S = 0.250

Reflectancies										
Ceiling/Cavity	0.7	0.7	0.5	0.5	0.3	0.7	0.7	0.5	0.5	0.3
Walls	0.5	0.3	0.5	0.3	0.3	0.5	0.3	0.5	0.3	0.3
WorkingPlane	0.2	0.2	0.2	0.2	0.2	0.2	0.2	0.2	0.2	0.2
RoomDimensions	ViewedCrosswise					ViewedEndwise				
x=2H y=2H	17.8	19.1	18.3	19.6	1.3	< 0	0.2	< 0	0.7	1.3
x=2H y=3H	19.4	20.5	19.9	21.0	1.2	< 0	0.1	< 0	0.6	1.2
x=2H y=4H	20.0	21.1	20.5	21.6	1.2	< 0	0.1	< 0	0.7	1.2
x=2H y=6H	20.4	21.5	21.0	22.0	1.6	< 0	0.4	< 0	1.0	1.6
x=2H y=8H	20.5	21.6	21.1	22.1	1.9	< 0	0.7	0.3	1.3	1.9
x=2H y=12H	20.6	21.6	21.2	22.2	2.5	0.3	1.2	0.9	1.8	2.5
x=4H y=2H	19.9	21.0	20.4	21.5	1.8	< 0	0.7	0.1	1.2	1.8
x=4H y=3H	21.8	22.8	22.4	23.4	1.7	< 0	0.5	0.1	1.1	1.7
x=4H y=4H	22.7	23.6	23.3	24.2	1.9	< 0	0.6	0.3	1.2	1.9
x=4H y=6H	23.3	24.1	24.0	24.7	2.3	0.2	1.0	0.9	1.6	2.3
x=4H y=8H	23.6	24.3	24.2	24.9	2.8	0.7	1.4	1.3	2.1	2.8
x=4H y=12H	23.7	24.4	24.3	25.0	3.5	1.4	2.1	2.1	2.8	3.5
x=8H y=4H	24.5	25.2	25.1	25.8	1.9	< 0	0.6	0.5	1.2	1.9
x=8H y=6H	25.6	26.2	26.3	26.9	2.6	0.6	1.2	1.2	1.9	2.6
x=8H y=8H	26.1	26.7	26.8	27.3	3.3	1.3	1.8	2.0	2.5	3.3
x=8H y=12H	26.5	26.9	27.1	27.6	4.3	2.3	2.8	3.0	3.5	4.3
x=12H y=4H	25.0	25.7	25.7	26.3	1.9	< 0	0.5	0.5	1.2	1.9
x=12H y=6H	26.4	27.0	27.1	27.7	2.7	0.7	1.3	1.4	1.9	2.7
x=12H y=8H	27.1	27.6	27.8	28.3	3.5	1.5	2.0	2.2	2.7	3.5

Luminaire
Code PX-0353-NEG
Name Aplique SAMPER led 12W 3000K
Measurem.
Code CL116A17F031G
Name Aplique SAMPER led 12W 3000K

Luminaire Flux	614.55 lm	Luminaire Power	11.82 W	Efficacy	51.99 lm/W	Efficiency	100.00%
Lamps Flux	614.55 lm	Maximum value	355.73 cd/klm	Position	C=90.00 G=45.00	CG	Sym. on planes 270-90

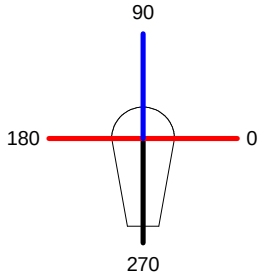

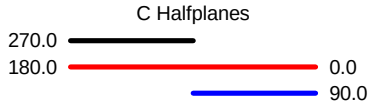

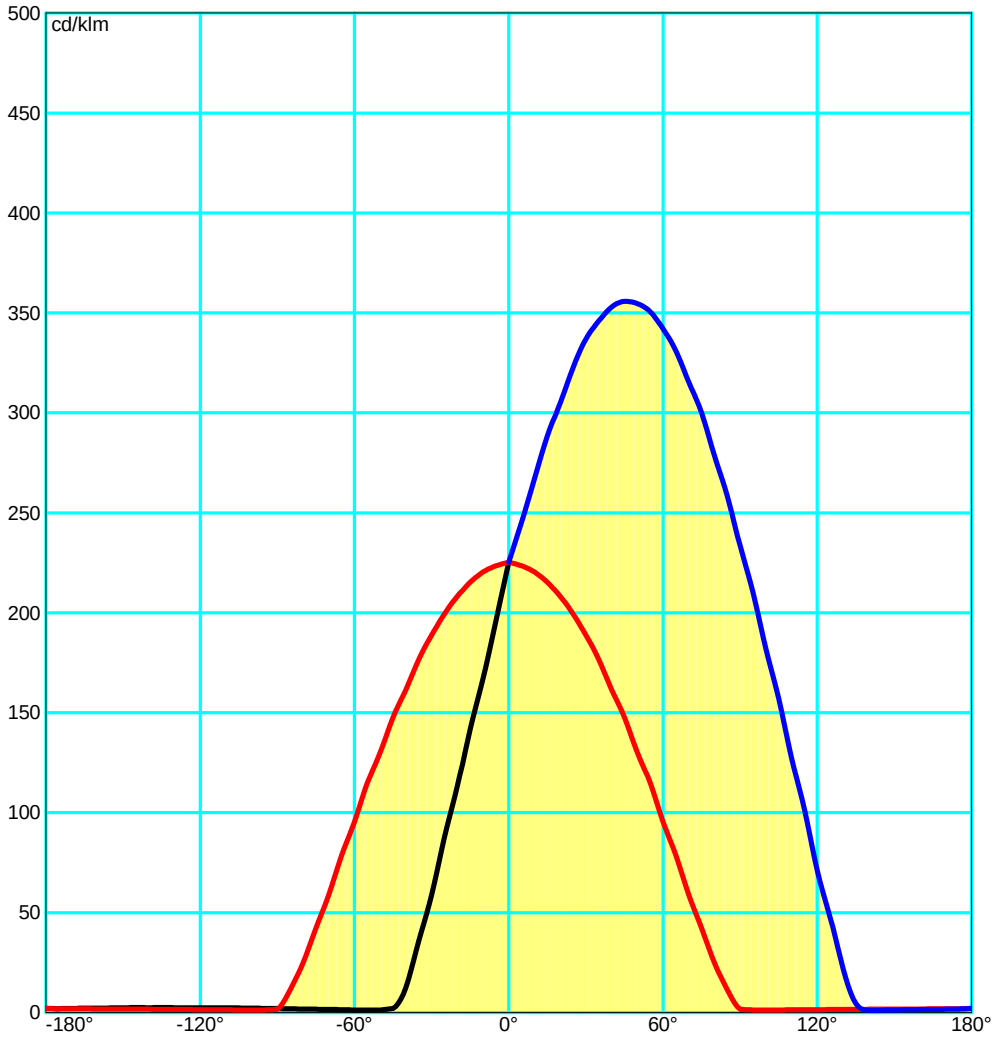

Luminaire
Code PX-0353-NEG
Name Aplique SAMPER led 12W 3000K
Measurem.
Code CL116A17F031G
Name Aplique SAMPER led 12W 3000K

Luminaire Flux	614.55 lm	Luminaire Power	11.82 W	Efficacy	51.99 lm/W	Efficiency	100.00%
Lamps Flux	614.55 lm	Maximum value	355.73 cd/klm	Position	C=90.00 G=45.00	CG	Sym. on planes 270-90

Luminance

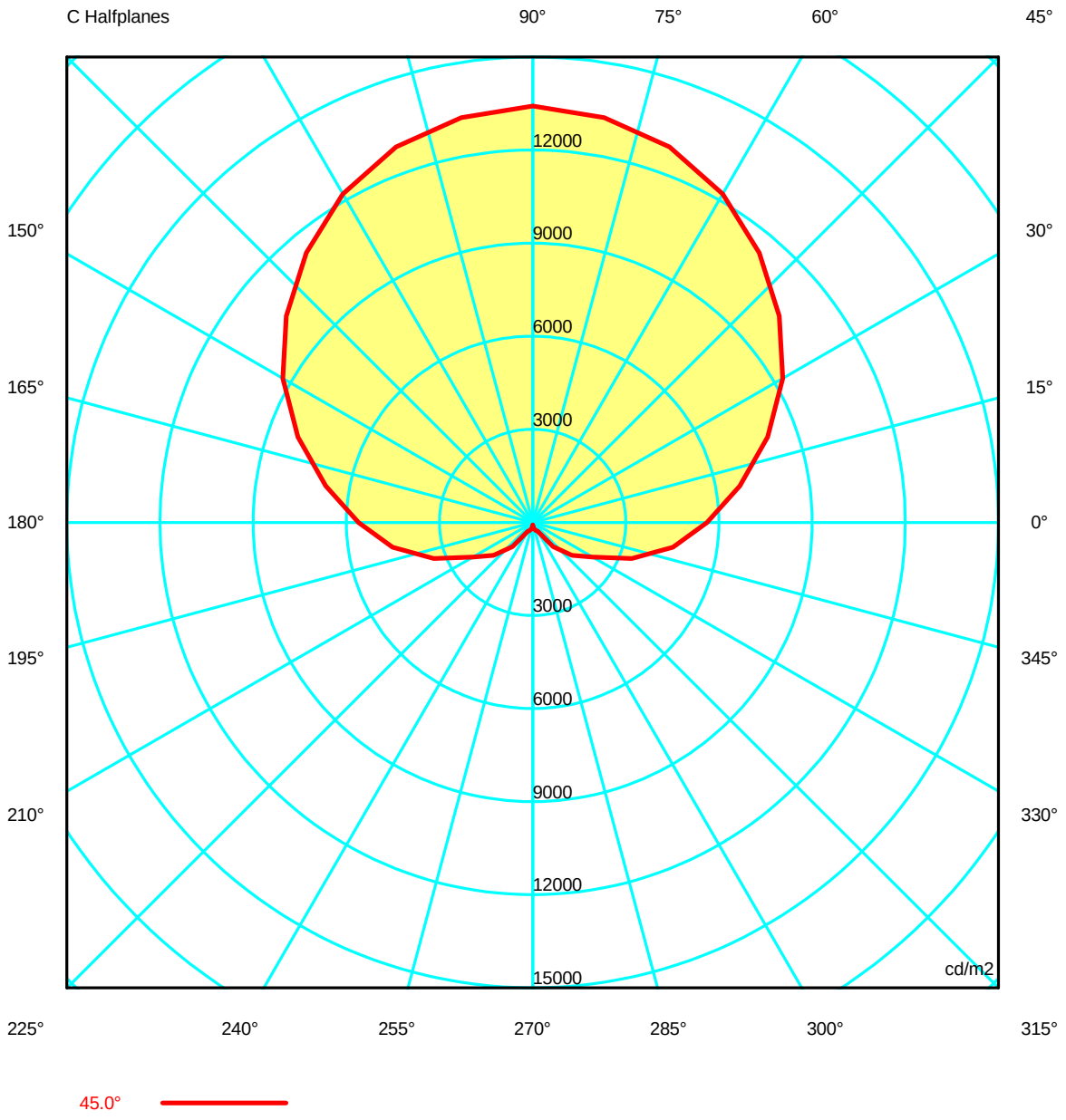

Luminaire
Code PX-0353-NEG
Name Aplique SAMPER led 12W 3000K
Measurem.
Code CL116A17F031G
Name Aplique SAMPER led 12W 3000K

Luminaire Flux	614.55 lm	Luminaire Power	11.82 W	Efficacy	51.99 lm/W	Efficiency	100.00%
Lamps Flux	614.55 lm	Maximum value	355.73 cd/klm	Position	C=90.00 G=45.00	CG	Sym. on planes 270-90

Luminance cd/m2 **Table 1/3**

	C 0.00	C 10.00	C 20.00	C 30.00	C 40.00	C 50.00	C 60.00	C 70.00	C 80.00	C 90.00	C 100.00	C 110.00	C 120.00
G 0.0	6071.29	6071.29	6071.29	6071.29	6071.29	6071.29	6071.29	6071.29	6071.29	6071.29	6071.29	6071.29	6071.29
G 5.0	6044.41	6197.28	6290.35	6348.82	6552.17	6622.21	6590.12	6756.85	6810.93	6632.28	6810.93	6756.85	6590.12
G 10.0	6027.70	6285.92	6501.74	6677.75	6969.38	7100.21	7127.75	7376.01	7474.64	7289.18	7474.64	7376.01	7127.75
G 15.0	6000.58	6365.01	6712.68	7022.08	7393.17	7625.42	7762.50	8034.98	8150.80	8019.04	8150.80	8034.98	7762.50
G 20.0	5961.28	6433.86	6907.88	7346.63	7822.70	8142.52	8360.68	8705.96	8855.08	8717.40	8855.08	8705.96	8360.68
G 25.0	5918.50	6507.01	7120.43	7698.50	8264.47	8703.85	9047.78	9419.75	9599.87	9548.95	9599.87	9419.75	9047.78
G 30.0	5860.01	6557.77	7318.69	8056.58	8734.29	9275.27	9722.45	10170.48	10361.94	10423.81	10361.94	10170.48	9722.45
G 35.0	5794.18	6635.72	7548.05	8426.54	9219.77	9904.20	10493.86	10993.60	11208.05	11299.12	11208.05	10993.60	10493.86
G 40.0	5666.40	6654.64	7769.60	8843.58	9761.80	10577.59	11308.86	11885.81	12203.02	12309.72	12203.02	11885.81	11308.86
G 45.0	5609.09	6767.49	8051.09	9295.58	10360.30	11342.86	12233.73	12882.57	13247.12	13418.67	13247.12	12882.57	12233.73
G 50.0	5434.66	6774.32	8319.03	9832.93	11053.62	12217.74	13308.13	14021.94	14428.50	14687.57	14428.50	14021.94	13308.13
G 55.0	5360.70	6928.89	8706.09	10460.47	11882.97	13258.93	14552.93	15385.45	15877.63	16229.43	15877.63	15385.45	14552.93
G 60.0	5101.44	6944.91	9118.74	11266.81	12873.25	14523.25	16158.10	17068.05	17603.52	18102.31	17603.52	17068.05	16158.10
G 65.0	4965.54	7133.72	9712.75	12335.89	14323.18	16293.86	18211.36	19335.64	20024.73	20643.99	20024.73	19335.64	18211.36
G 70.0	4592.58	7325.17	10589.75	13866.19	16218.20	18740.56	21294.01	22543.27	23288.07	24157.39	23288.07	22543.27	21294.01
G 75.0	4333.18	7763.82	11965.88	16318.49	19537.44	22808.30	26006.57	27691.74	28801.40	30060.84	28801.40	27691.74	26006.57
G 80.0	3782.47	8481.56	14812.07	21115.70	25494.27	30393.65	35397.40	37496.66	38822.26	40818.42	38822.26	37496.66	35397.40
G 85.0	3413.95	11213.24	22784.38	34413.59	42804.58	51575.87	60249.06	64550.05	67532.10	71383.38	67532.10	64550.05	60249.06
G 90.0	10294.88	101354.29	217394.64	309443.52	353548.26	412222.53	479156.13	504964.10	534286.37	597460.77	534286.37	504964.10	479156.13

Luminaire
Code PX-0353-NEG
Name Aplique SAMPER led 12W 3000K
Measurem.
Code CL116A17F031G
Name Aplique SAMPER led 12W 3000K

Luminaire Flux	614.55 lm	Luminaire Power	11.82 W	Efficacy	51.99 lm/W	Efficiency	100.00%
Lamps Flux	614.55 lm	Maximum value	355.73 cd/klm	Position	C=90.00 G=45.00	CG	Sym. on planes 270-90

Luminance cd/m2 **Table 2/3**

	C 130.00	C 140.00	C 150.00	C 160.00	C 170.00	C 180.00	C 190.00	C 200.00	C 210.00	C 220.00	C 230.00	C 240.00	C 250.00
G 0.0	6071.29	6071.29	6071.29	6071.29	6071.29	6071.29	6071.29	6071.29	6071.29	6071.29	6071.29	6071.29	6071.29
G 5.0	6622.21	6552.17	6348.82	6290.35	6197.28	6044.41	5987.85	5841.28	5666.12	5708.12	5617.36	5427.08	5516.94
G 10.0	7100.21	6969.38	6677.75	6501.74	6285.92	6027.70	5883.91	5625.53	5316.48	5249.59	5066.10	4799.90	4846.45
G 15.0	7625.42	7393.17	7022.08	6712.68	6365.01	6000.58	5740.17	5353.56	4949.67	4855.80	4558.04	4147.43	4234.70
G 20.0	8142.52	7822.70	7346.63	6907.88	6433.86	5961.28	5600.67	5104.86	4570.73	4344.39	4009.29	3602.85	3598.61
G 25.0	8703.85	8264.47	7698.50	7120.43	6507.01	5918.50	5434.19	4806.95	4176.60	3920.87	3470.52	2917.23	2931.90
G 30.0	9275.27	8734.29	8056.58	7318.69	6557.77	5860.01	5270.84	4522.15	3749.89	3361.70	2878.89	2330.99	2234.91
G 35.0	9904.20	9219.77	8426.54	7548.05	6635.72	5794.18	5065.83	4164.22	3274.99	2868.14	2288.31	1600.22	1576.51
G 40.0	10577.59	9761.80	8843.58	7769.60	6654.64	5666.40	4849.32	3836.99	2784.01	2223.08	1635.42	1004.62	845.79
G 45.0	11342.86	10360.30	9295.58	8051.09	6767.49	5609.09	4587.18	3389.19	2228.72	1651.21	1019.34	325.43	270.54
G 50.0	12217.74	11053.62	9832.93	8319.03	6774.32	5434.66	4267.35	2940.14	1633.03	914.59	439.17	77.91	70.71
G 55.0	13258.93	11882.97	10460.47	8706.09	6928.89	5360.70	3924.84	2402.24	1007.38	286.79	109.64	56.25	55.86
G 60.0	14523.25	12873.25	11266.81	9118.74	6944.91	5101.44	3433.19	1718.80	350.40	170.41	76.47	68.09	60.47
G 65.0	16293.86	14323.18	12335.89	9712.75	7133.72	4965.54	2960.15	1215.67	110.16	0.00	84.08	84.65	84.63
G 70.0	18740.56	16218.20	13866.19	10589.75	7325.17	4592.58	2142.99	616.97	108.90	74.99	109.14	112.86	110.51
G 75.0	22808.30	19537.44	16318.49	11965.88	7763.82	4333.18	1338.29	18.29	147.83	186.45	153.78	157.69	155.83
G 80.0	30393.65	25494.27	21115.70	14812.07	8481.56	3782.47	917.00	18.32	230.45	234.02	238.98	245.35	245.20
G 85.0	51575.87	42804.58	34413.59	22784.38	11213.24	3413.95	660.89	388.85	451.94	472.76	476.06	491.31	488.48
G 90.0	412222.53	353548.26	309443.52	217394.64	101354.29	10294.88	0.00	5601.40	5107.48	4743.86	4577.19	4562.40	4515.15

Luminaire
Code PX-0353-NEG
Name Aplique SAMPER led 12W 3000K
Measurem.
Code CL116A17F031G
Name Aplique SAMPER led 12W 3000K

Luminaire Flux	614.55 lm	Luminaire Power	11.82 W	Efficacy	51.99 lm/W	Efficiency	100.00%
Lamps Flux	614.55 lm	Maximum value	355.73 cd/klm	Position	C=90.00 G=45.00	CG	Sym. on planes 270-90

Luminance cd/m2 **Table 3/3**

	C 260.00	C 270.00	C 280.00	C 290.00	C 300.00	C 310.00	C 320.00	C 330.00	C 340.00	C 350.00
G 0.0	6071.29	6071.29	6071.29	6071.29	6071.29	6071.29	6071.29	6071.29	6071.29	6071.29
G 5.0	5526.84	5298.39	5526.84	5516.94	5427.08	5617.36	5708.12	5666.12	5841.28	5987.85
G 10.0	4826.93	4569.08	4826.93	4846.45	4799.90	5066.10	5249.59	5316.48	5625.53	5883.91
G 15.0	4258.15	3949.02	4258.15	4234.70	4147.43	4558.04	4855.80	4949.67	5353.56	5740.17
G 20.0	3528.81	3227.58	3528.81	3598.61	3602.85	4009.29	4344.39	4570.73	5104.86	5600.67
G 25.0	2922.58	2589.20	2922.58	2931.90	2917.23	3470.52	3920.87	4176.60	4806.95	5434.19
G 30.0	2141.29	1814.65	2141.29	2234.91	2330.99	2878.89	3361.70	3749.89	4522.15	5270.84
G 35.0	1499.86	1168.31	1499.86	1576.51	1600.22	2288.31	2868.14	3274.99	4164.22	5065.83
G 40.0	737.72	440.63	737.72	845.79	1004.62	1635.42	2223.08	2784.01	3836.99	4849.32
G 45.0	187.08	74.96	187.08	270.54	325.43	1019.34	1651.21	2228.72	3389.19	4587.18
G 50.0	61.41	49.99	61.41	70.71	77.91	439.17	914.59	1633.03	2940.14	4267.35
G 55.0	52.33	56.30	52.33	55.86	56.25	109.64	286.79	1007.38	2402.24	3924.84
G 60.0	66.88	68.17	66.88	60.47	68.09	76.47	170.41	350.40	1718.80	3433.19
G 65.0	86.16	89.23	86.16	84.63	84.65	84.08	0.00	110.16	1215.67	2960.15
G 70.0	112.41	120.54	112.41	110.51	112.86	109.14	74.99	108.90	616.97	2142.99
G 75.0	155.55	164.87	155.55	155.83	157.69	153.78	186.45	147.83	18.29	1338.29
G 80.0	247.96	253.64	247.96	245.20	245.35	238.98	234.02	230.45	18.32	917.00
G 85.0	491.99	513.43	491.99	488.48	491.31	476.06	472.76	451.94	388.85	660.89
G 90.0	4670.84	5128.88	4670.84	4515.15	4562.40	4577.19	4743.86	5107.48	5601.40	0.00

Luminaire
Code PX-0353-NEG
Name Aplique SAMPER led 12W 3000K
Measurem.
Code CL116A17F031G
Name Aplique SAMPER led 12W 3000K

Luminaire Flux	614.55 lm	Luminaire Power	11.82 W	Efficacy	51.99 lm/W	Efficiency	100.00%
Lamps Flux	614.55 lm	Maximum value	355.73 cd/klm	Position	C=90.00 G=45.00	CG	Sym. on planes 270-90

PERCENTAGE ISOCANDLES

Projection: Equal Area SLI 8.1 Tight Tilting Angle:0°

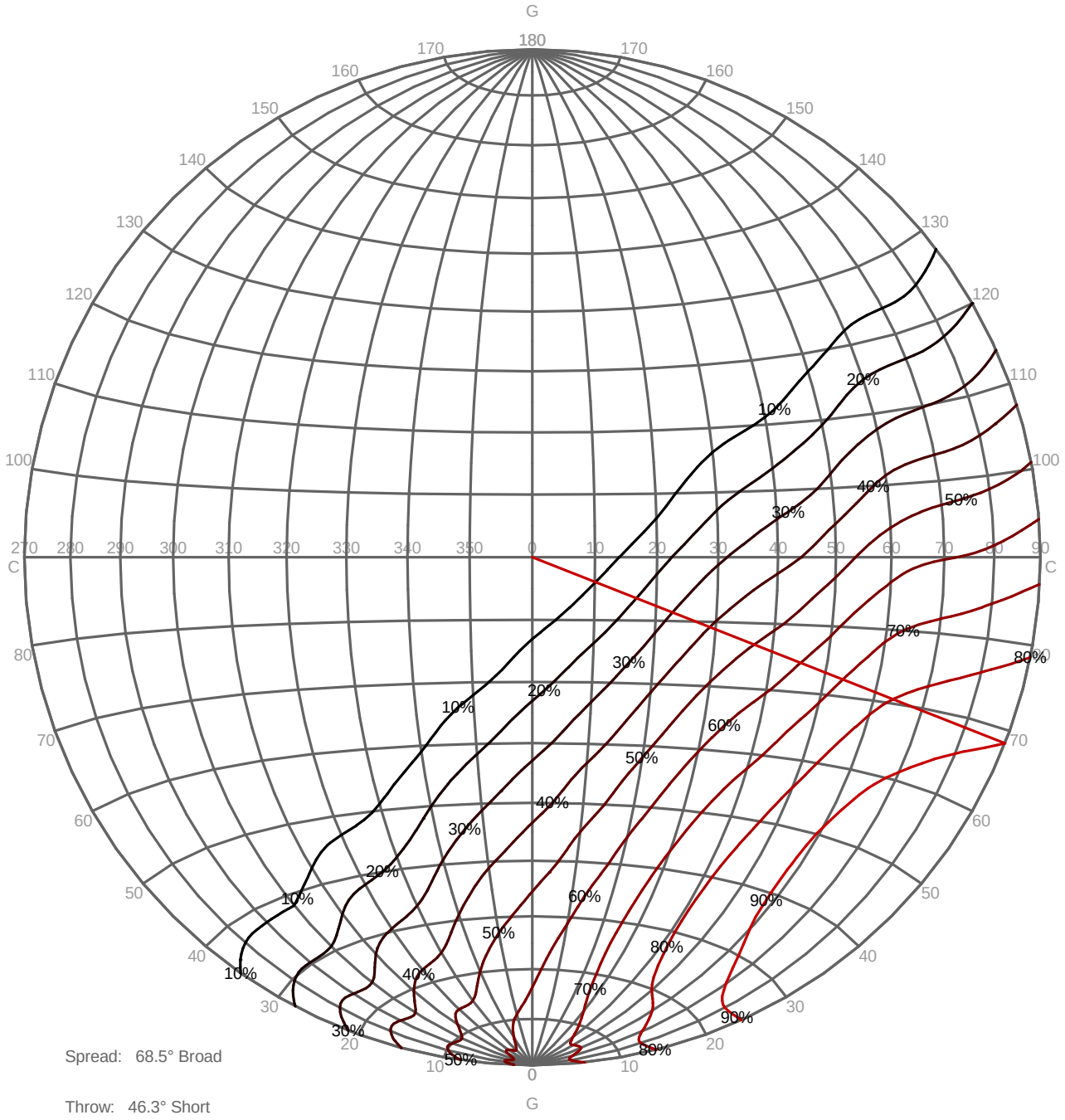

Spread: 68.5° Broad

Throw: 46.3° Short

Luminaire
Code PX-0353-NEG
Name Aplique SAMPER led 12W 3000K
Measurem.
Code CL116A17F031G
Name Aplique SAMPER led 12W 3000K

Luminaire Flux	614.55 lm	Luminaire Power	11.82 W	Efficacy	51.99 lm/W	Efficiency	100.00%
Lamps Flux	614.55 lm	Maximum value	355.73 cd/klm	Position	C=90.00 G=45.00	CG	Sym. on planes 270-90

Isolux (Floor)

Luminaire position X=0.00m Y=0.00m Z=2.50m

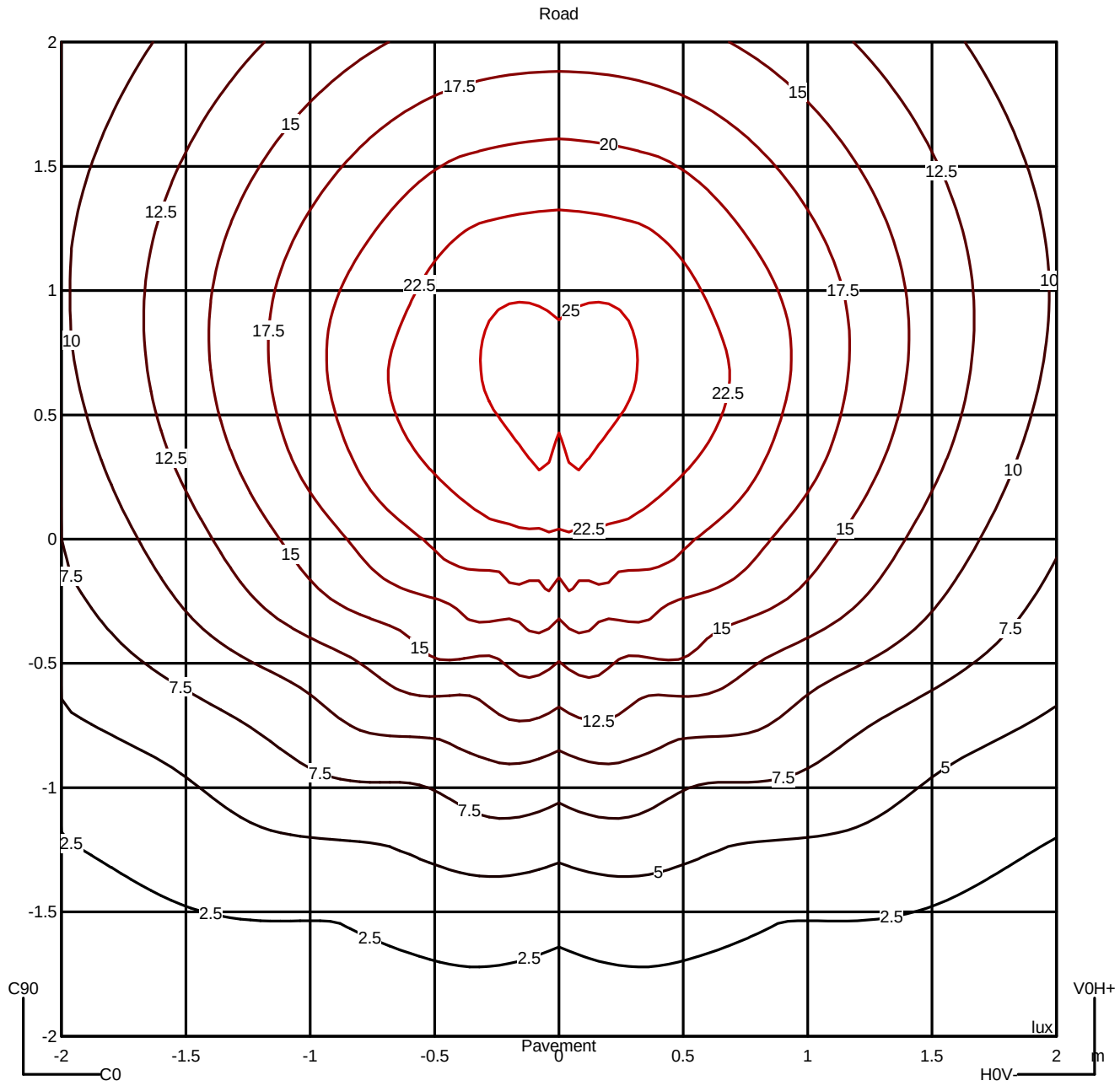

Luminaire
Code PX-0353-NEG
Name Aplique SAMPER led 12W 3000K
Measurem.
Code CL116A17F031G
Name Aplique SAMPER led 12W 3000K

Luminaire Flux	614.55 lm	Luminaire Power	11.82 W	Efficacy	51.99 lm/W	Efficiency	100.00%
Lamps Flux	614.55 lm	Maximum value	355.73 cd/klm	Position	C=90.00 G=45.00	CG	Sym. on planes 270-90

Average Luminance [cd/m²]

	45°	50°	55°	60°	65°	70°	75°	80°	85°	
0.0°	5609	5435	5361	5101	4966	4593	4333	3782	3414	---
90.0°	13419	14688	16229	18102	20644	24157	30061	40818	71383	---

Flush mounted or longitudinal view												
		Illumination(lx)										
A	A	2000	1000	750	500		<300					1.15
B	1		2000	1500	1000	750	500	<300				1.5
C					2000		1000	500	<300			1.85
D	2						2000	1000	500	<300		2.2
E	3							2000	1000	500	<300	2.55

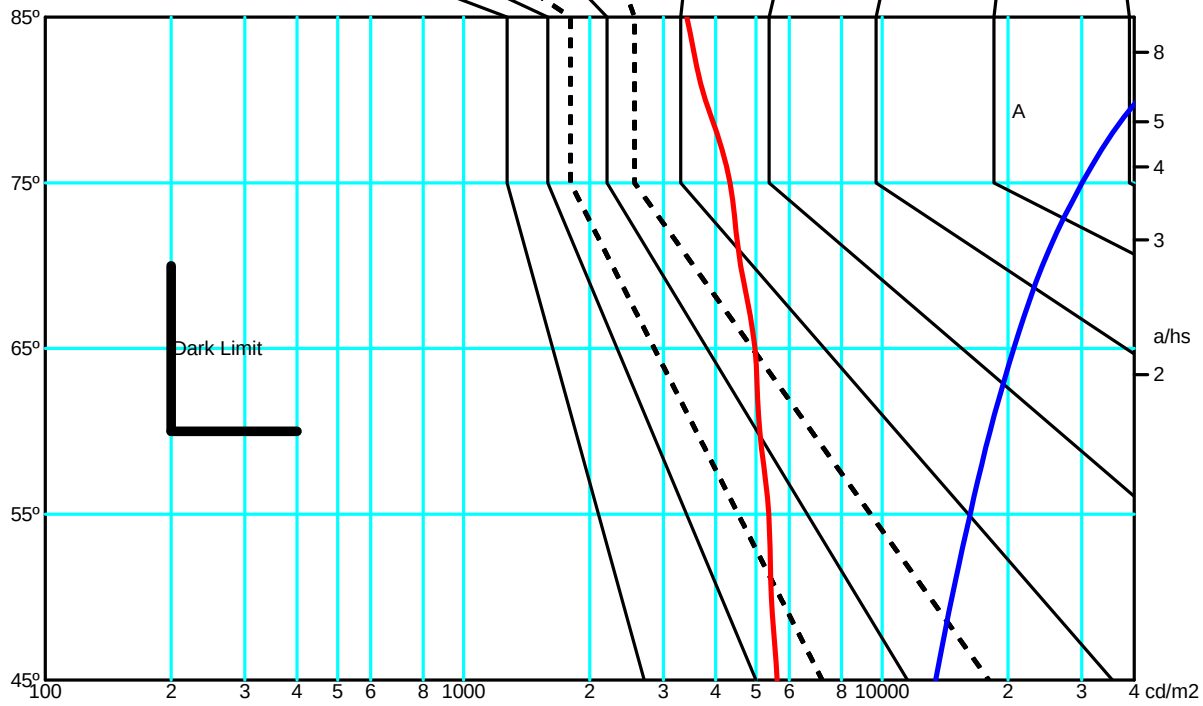

Longitudinal Transversal

PX-0353

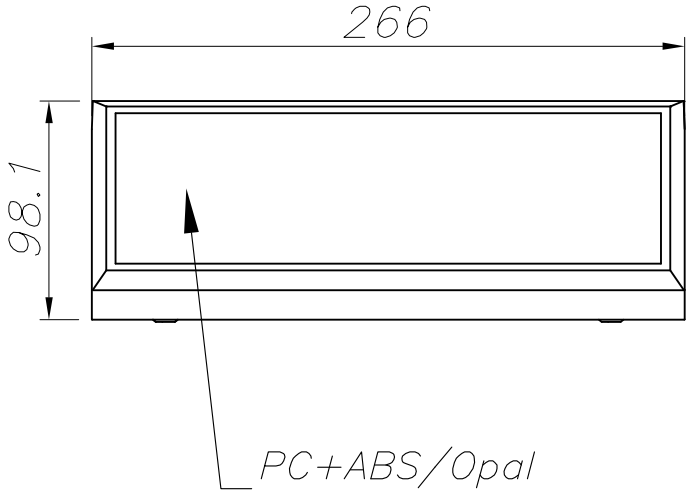

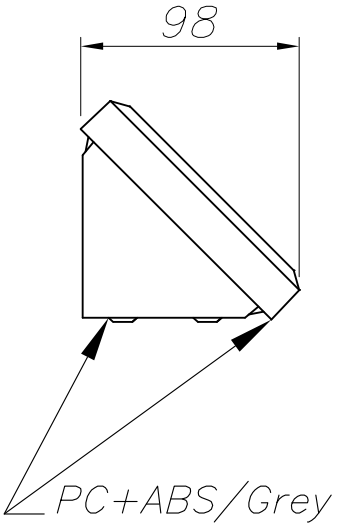

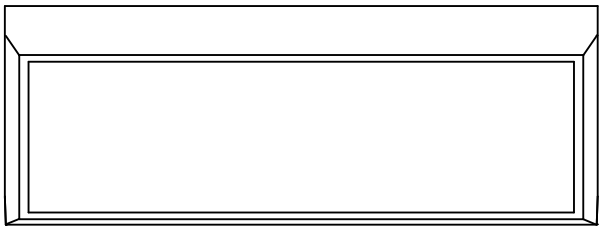

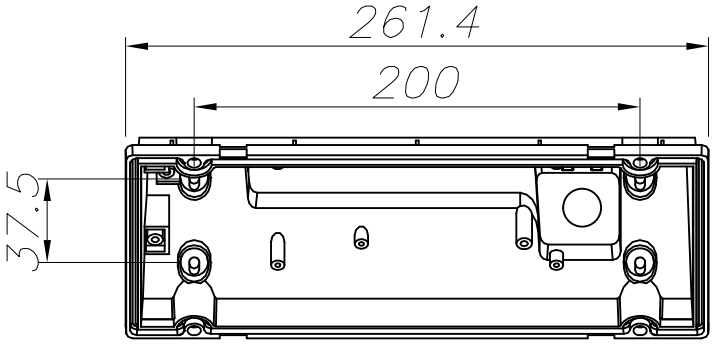

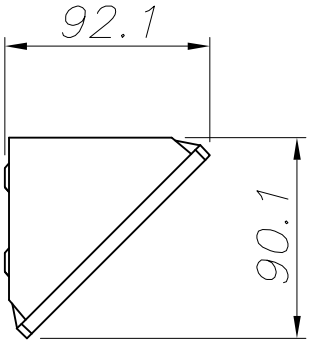

Samper

PX-0353

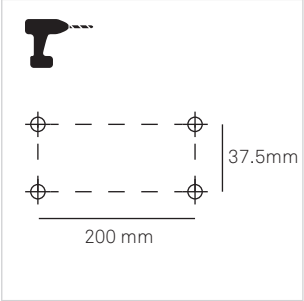

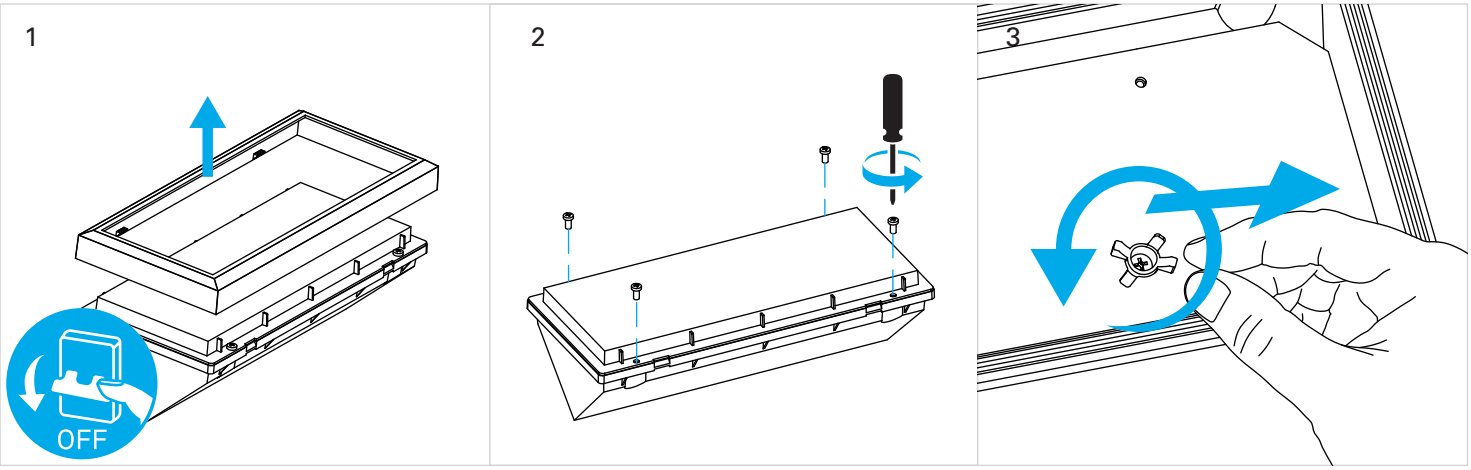

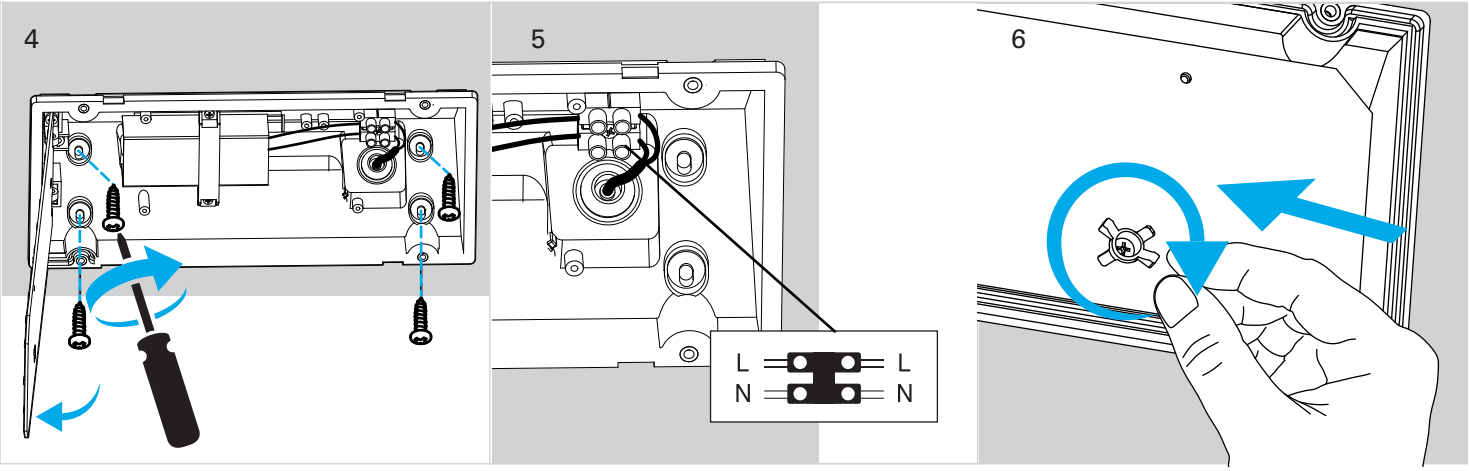

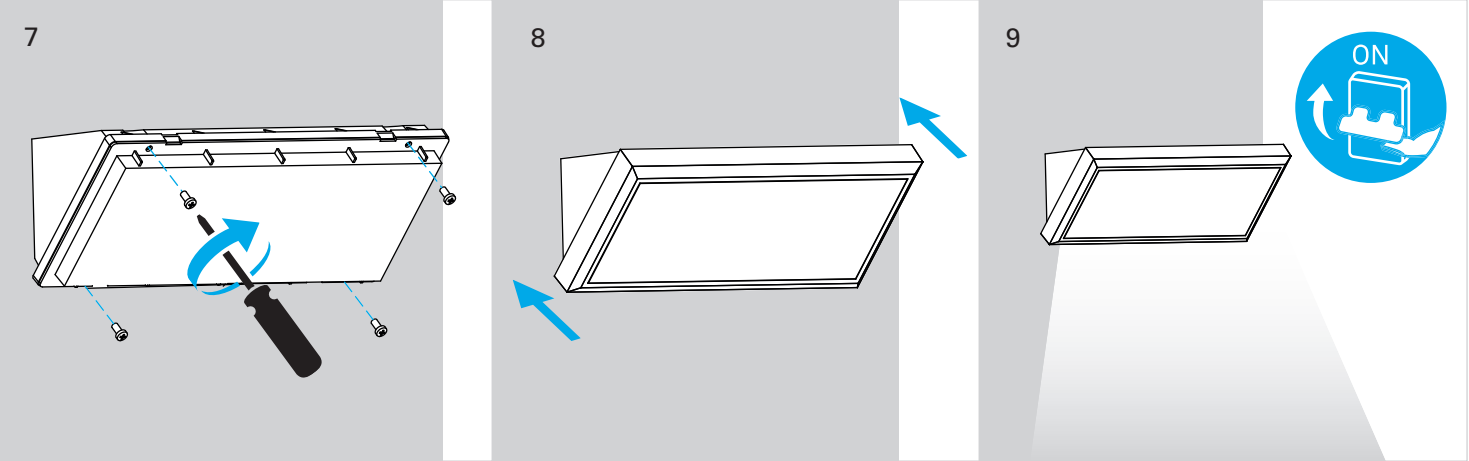

4-12-2020